Kingsway Group

INSTALLATION INSTRUCTIONS

KG710 KALM Towel Hook

INSTALLATION INSTRUCTIONS

KG710 KALM Towel Hook

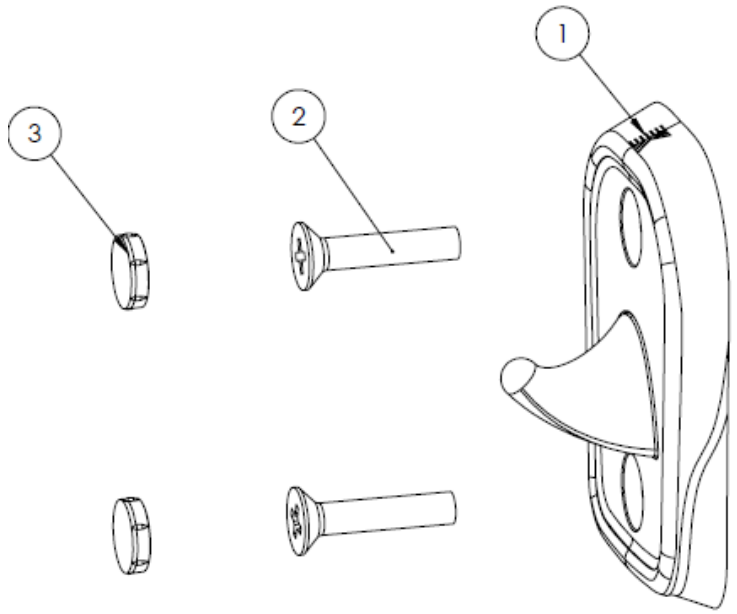

Number	Component	Qty.
1.	Towel Hook Assembly	1
2.	Screws	2
3.	Plugs	2

INSTALLATION INSTRUCTIONS

KG710 KALM Towel Hook

1.

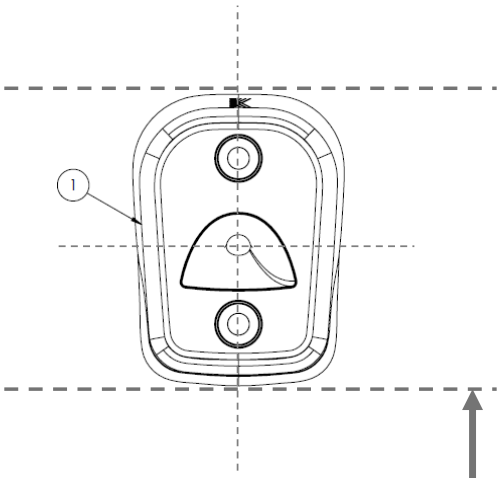

Align Towel Hook, to requested height, making sure it sits level. Drill Pilot holes on the fixing holes.

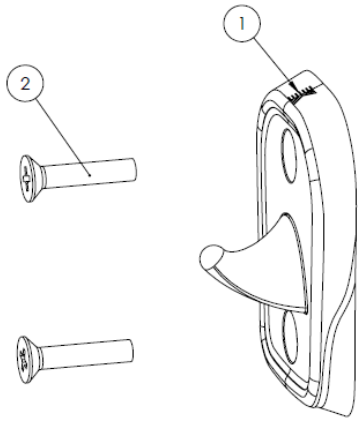

Screw Towel Hook to the wall, use expansion plugs if needed.

2.

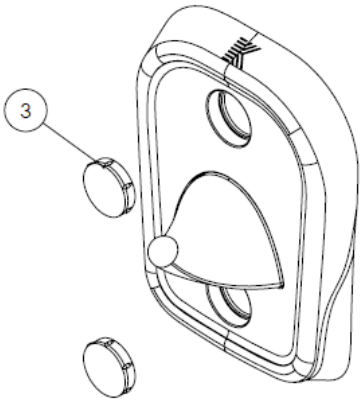

Press fit plugs provided to cover screw heads.

Ensure plugs sit flush.

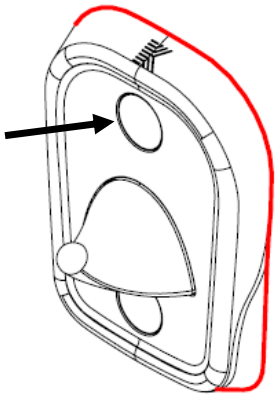

Use anti-pick mastic around the edges between Towel Hook and the wall, (as highlighted in red.)

Kingsway Group

The best ideas start with a conversation

144/146 Russell St
Emu Plains
NSW 2750

1800 325 175
sales@kingswaygroupau.com

kingswaygroupglobal.com

Visit our website to learn more