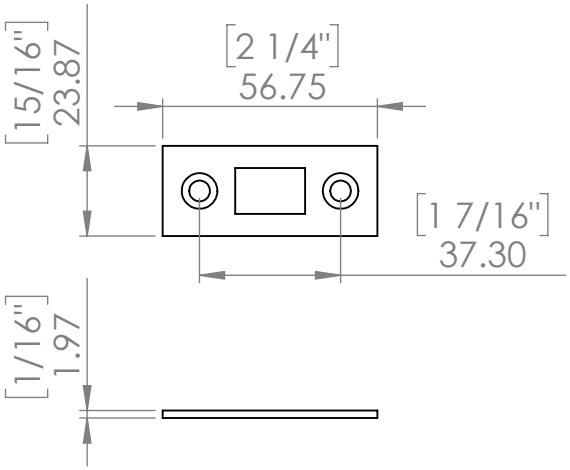

Frame Lock Keep Plate

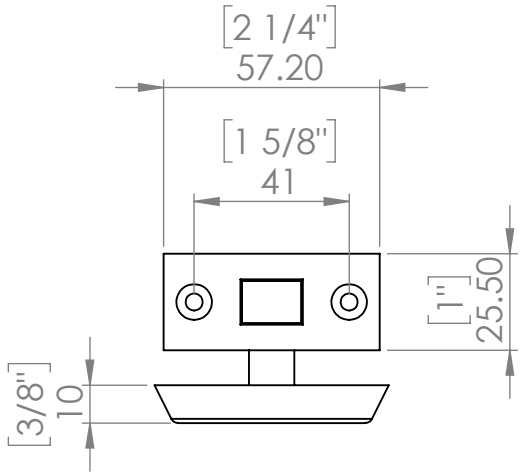

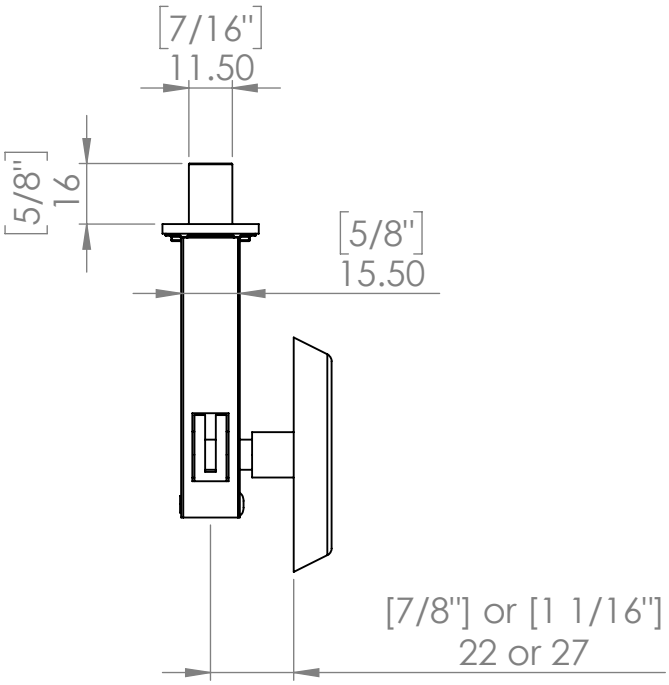

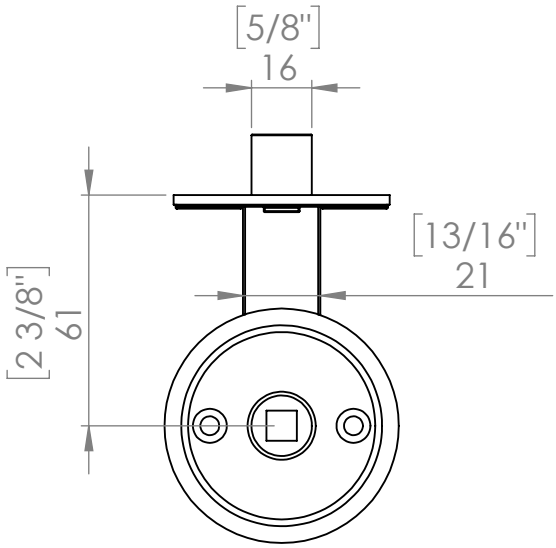

Square Key

Kingsway Anti Ligature Quarter
Turn Dead Bolt Square Drive

Dimension: mm [inch]

Code: KG221

Kingsway Group

UK: sales@kingswaygroup.co.uk
www.kingswaygroup.co.uk
US: sales@kingswaygroupglobal.com
www.kingswaygroupglobal.com